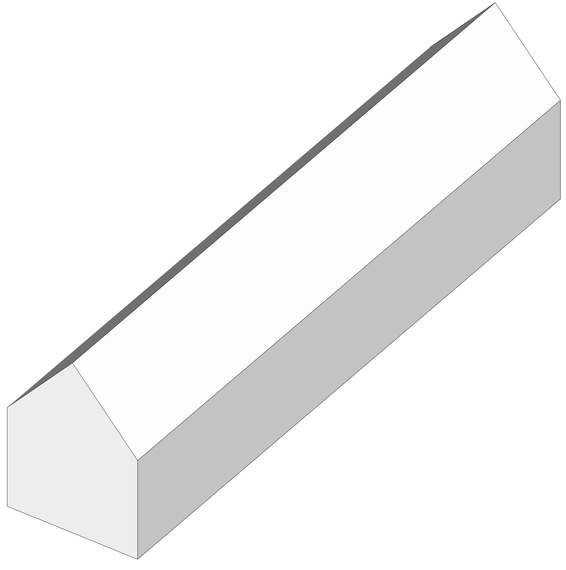

AGRICULTURAL SHED

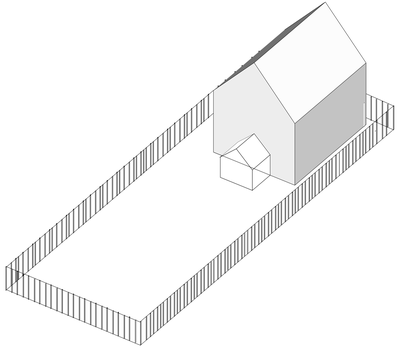

DETACHED HOUSE
VERANDA
FENCE

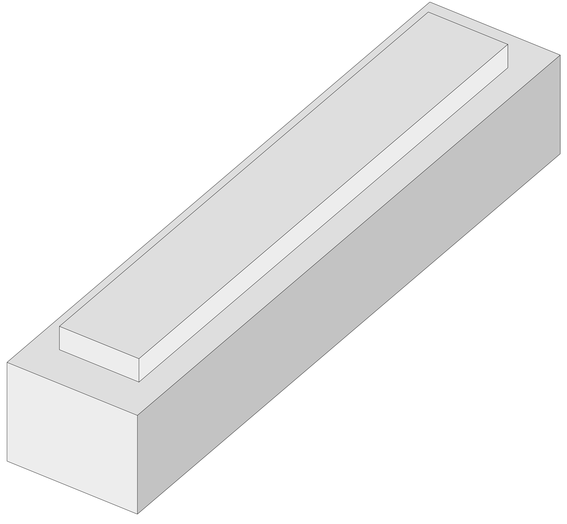

URBAN GAUGE

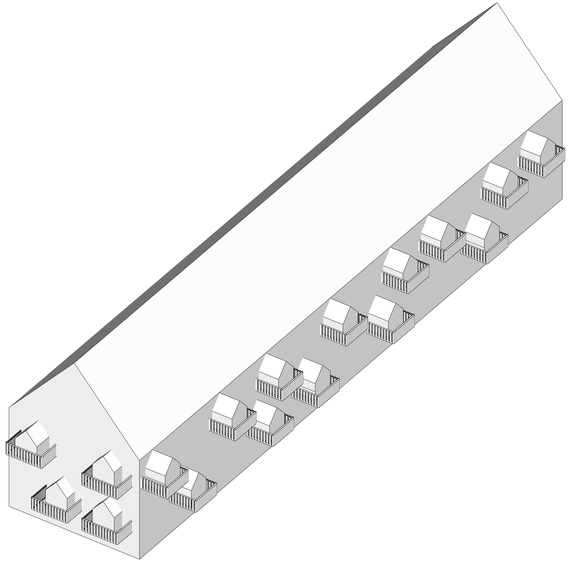

COMPOSITE